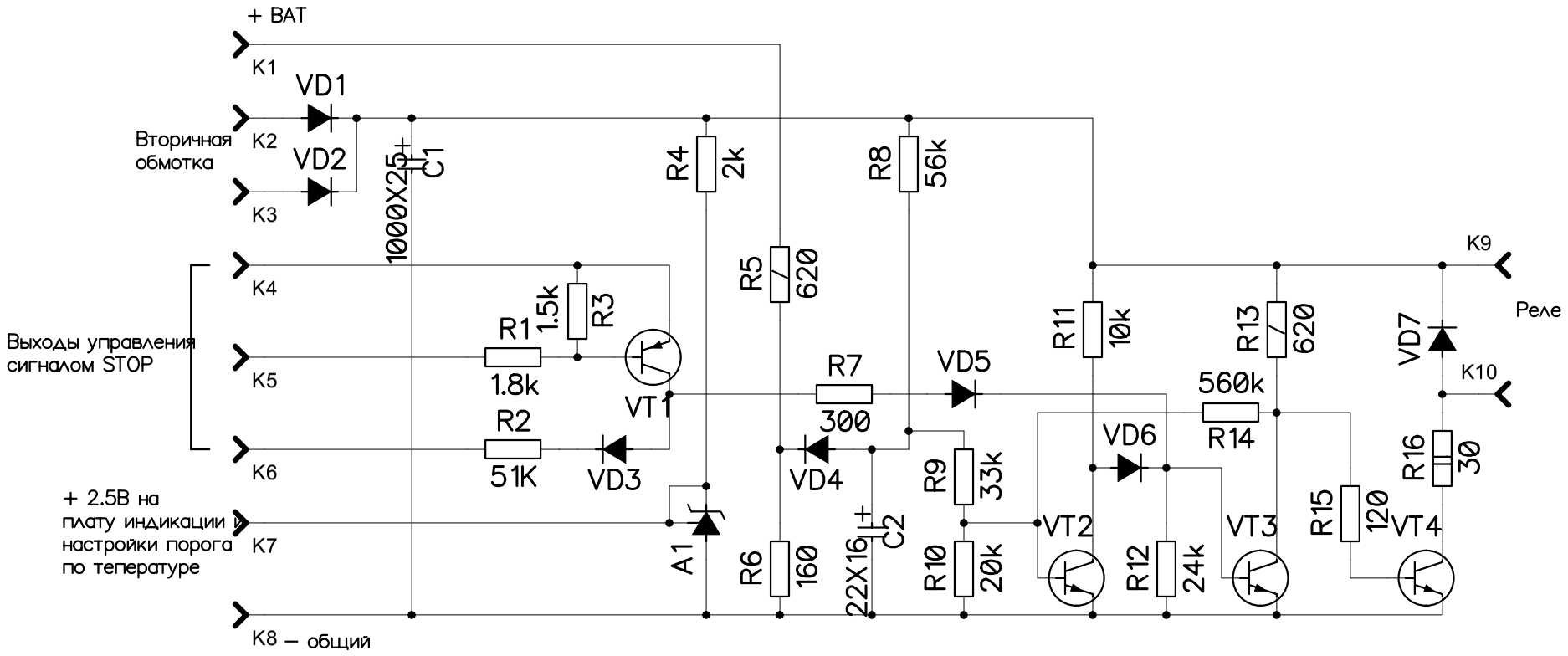


| | | | |
|---|---|---|---|
| Title | BZ | | |
| Size A4 | Number | | Rev |
| Date | Sat Feb 11, 2006 | Drawn by | Lyzhin |
| Filename | PZ.sch | Sheet | of |